Temposonics
AN AMPHENOL COMPANY

Data Sheet

E-Series EP2 IO-Link

Magnetostrictive Linear Position Sensors

- Flexible mounting
- Position and velocity measurements with multiple magnets
- Flat & compact

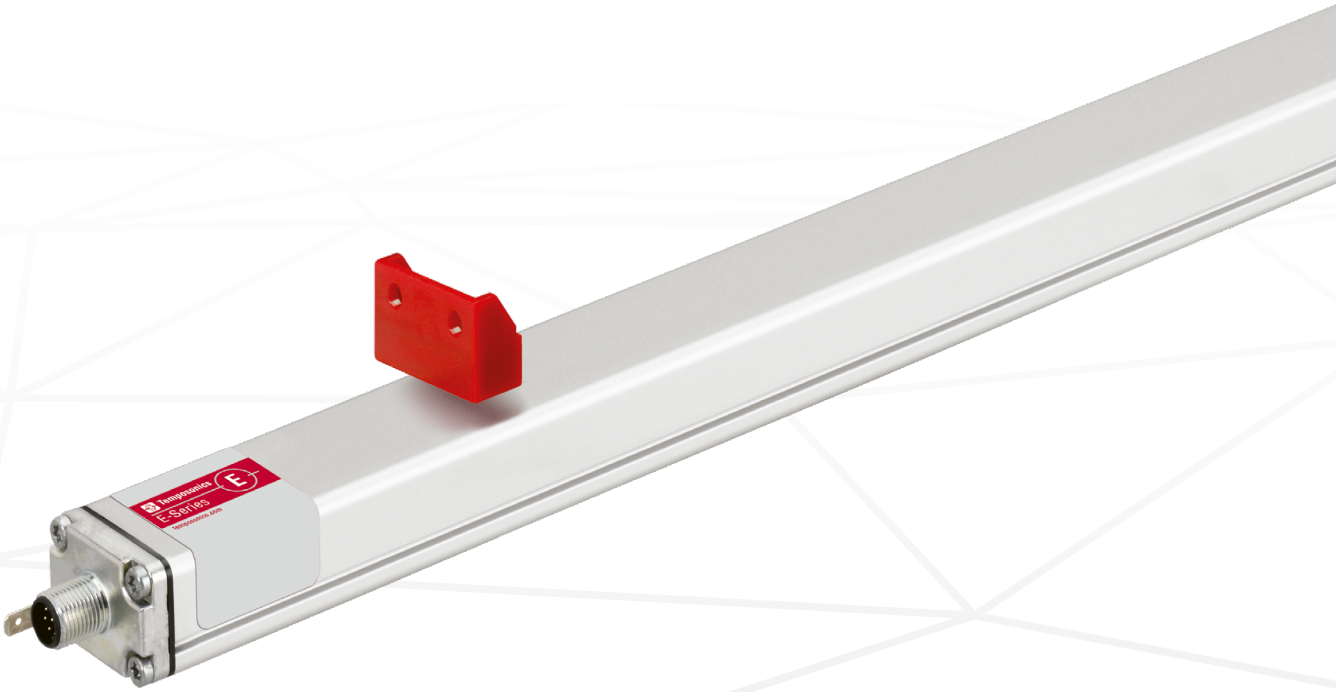

MEASURING TECHNOLOGY

The absolute, linear position sensors provided by Temposonics rely on the company's proprietary magnetostrictive technology, which can determine position with a high level of precision and robustness. Each Temposonics position sensor consists of a ferromagnetic waveguide, a position magnet, a strain pulse converter and a supporting electronics. The magnet, connected to the object in motion in the application, generates a magnetic field at its location on the waveguide. A short current pulse is applied to the waveguide. This creates a momentary radial magnetic field and torsional strain on the waveguide. The momentary interaction of the magnetic fields releases a torsional strain pulse that propagates the length of the waveguide. When the ultrasonic wave reaches the beginning of the waveguide it is converted into an electrical signal. Since the speed of the ultrasonic wave in the waveguide is precisely known, the time required to receive the return signal can be converted into a linear position measurement with both high accuracy and repeatability.

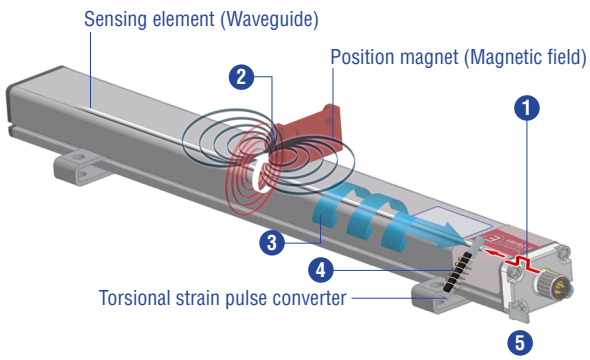

Measurement Cycle

1	Current pulse generates magnetic field
2	Interaction with position magnet field generates torsional strain pulse
3	Torsional strain pulse propagates
4	Strain pulse detected by converter
5	Time-of-flight converted into position

Fig. 1: Time-of-flight based magnetostrictive position sensing principle

E-SERIES EP2 IO-LINK

The Temposonics® E-Series offers you a compact solution for linear position measurement. It is ideally suited for different applications in the industrial environment. The main advantages of the E-Series EP2 are:

- **Direct measurement of the axis movement**
  The flat profile version EP2 is designed for installation on a machine. This allows you to easily measure the movement of a machine axis directly.
- **Compact design**
  The E-Series sensors are designed to take up very little space. This means that you can also use the sensors well in limited spaces.
- **Reliable performance**
  With their performance, the sensors of the E-Series ensure reliable position measurement. Therefore, the sensors are very well suited for many different applications.
- **Robust and proven**
  The E-Series sensors are desigend to be robust. The E-Series has proven in the industrial environment for many years.

IO-LINK

IO-Link is a standardized IO technology (IEC 61131-9) for serial and bidirectional communication between sensor and controller. The E-Series IO-Link is characterized by:

- **IO-Link certified**
  The E-Series with IO-Link V1.1 and COM3 fulfills the IO-Link specification. This is the prerequisite that the sensor works on any IO-Link master.
- **8 positions simultaneously**
  The E-Series IO-Link can detect and report the positions of up to 8 magnets simultaneously.
- **Customize to your requirements**
  You can adjust important parameters at the sensor for the position measurement such as resolution, measuring direction and measuring range according to your requirements.
- **Position, velocity and switch state**
  With up to 4 magnets, the sensor reports not only the position but also the velocity. In addition, a switch state can be transmitted in parallel via the digital output. You can parameterize the switch points and the switch logic.

TECHNICAL DATA

Output	
Interface	Digital
Transmission protocol	IO-Link V1.1
Data format	Standard single-postion measurement: 32 bit signed (position in µm) Advancded single-position measurement and multi-position measurement: 8 × 32 bit signed (position in µm, velocity in µm/s)
Data transmission rate	COM3 (230.4 kBaud)
Process data device – master	Standard single-postion measurement: 4 bytes Advancded single-position measurement and multi-position measurement: 32 bytes
Process data master – device	0 bytes
Measured value	Standard single-postion measurement: Position Advancded single-position measurement and multi-position measurement: Position and velocity
Measurement parameters	
Resolution [1]	5 µm, 10 µm, 20 µm, 50 µm or 100 µm
Cycle time	Standard single-position measurement: Sensors with stroke length ≤ 1000 mm (≤ 39 in.): 1 ms Sensors with stroke length ≥ 1000 mm (≥ 39 in.): 2 ms Advanced single-position measurement and multi-position measurement: 4 ms
Linearity	Block magnet: ≤ ±0.02 % F.S. (minimum ±90 µm)
Repeatability	≤ ±0.005 % F.S. (minimum ±20 µm)
Operating conditions	
Operating temperature	–40…+75 °C (–40…+167 °F)
Humidity	90 % relative humidity, no condensation
Ingress protection [2]	IP67 (connector correctly fitted)
Shock test	100 g (single shock), IEC standard 60068-2-27
Vibration test	8 g/10…2000 Hz, IEC standard 60068-2-6 (resonance frequencies excluded)
EMC test	Electromagnetic emission according to EN 61000-6-3 Electromagnetic immunity according to EN 61000-6-2
Magnet movement velocity	Any
Design/Material	
Sensor lid	Zinc die cast
Sensor profile	Aluminum
Stroke length	50…2540 mm (2…100 in.)
Mechanical mounting	
Mounting position	Any
Mounting instruction	Please consult the technical drawings on page 4 and the operation manual (document number: 551845).
Electrical connection	
Connection type	M12 male connector (4 pin)
Operating voltage	+24 VDC (±25 %)
Ripple	≤ 0.28 V_{pp}
Current consumption	< 50 mA
Dielectric strength	500 VDC (DC ground to machine ground)
Polarity protection	Up to –30 VDC
Overvoltage protection	Up to 36 VDC

1/ Selectable via IO-Link master
2/ The IP rating IP67 is only valid for the sensors electronics housing, as water and dust can get inside the profile.

TECHNICAL DRAWING

EP2

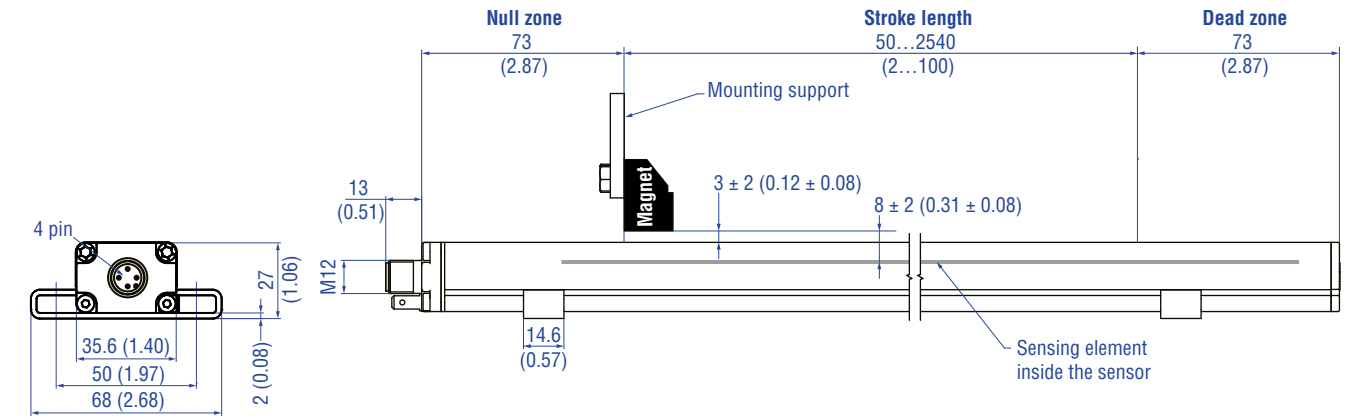

Controlling design dimensions are in millimeters and measurements in ( ) are in inches

Fig. 2: E-Series EP2 with block magnet

CONNECTOR WIRING

D44

Signal + power supply		
M12 male connector	**Pin**	**Function**
 View on sensor	1	+24 VDC (–15/+20 %)
	2	DI/DQ
	3	DC Ground (0 V)
	4	C/Q

Fig. 3: Connector wiring D44

FREQUENTLY ORDERED ACCESSORIES – Additional options available in our Accessories Guide 551444

Position magnet	Cables		Mouting clamp
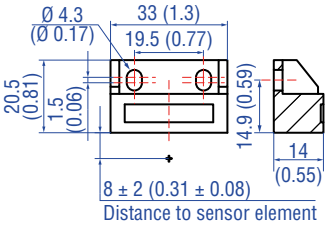			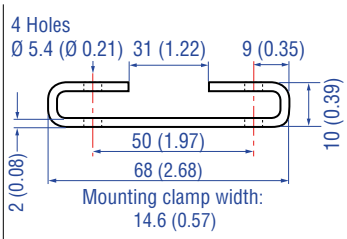
Block magnet L **Part no. 403 448**	**Cable with M12 A-coded female connector (5 pin), straight – pigtail** **Part no. 370 673**	**Cable with M12 A-coded female connector (5 pin), angled – pigtail** **Part no. 370 675**	**Mounting clamp** **Part no. 403 508**
Material: Plastic carrier with hard ferrite magnet Weight: Approx. 20 g Fastening torque for M4 screws: 1 Nm Operating temperature: –40…+75 °C (–40…+167 °F) This magnet may influence the sensor performance specifications for some applications.	Material: PUR jacket; black Features: Shielded Cable length: 5 m (16.4 ft) Ingress protection: IP67 (correctly fitted) Operating temperature: –25…+80 °C (–13…+176 °F)	Material: PUR jacket; black Features: Shielded Cable length: 5 m (16.4 ft) Ingress protection: IP67 (correctly fitted) Operating temperature: –25…+80 °C (–13…+176 °F)	Material: Stainless steel 1.4301/1.4305 (AISI 304/303)

NOTICE

The wiring of the cables is available in the accessories brochure (document no. 551444)

Controlling design dimensions are in millimeters and measurements in ( ) are in inches
Color of connectors and cable jacket may change. Colors of the cores and technical properties remain unchanged.

ORDER CODE

1	2	3	4	5	6	7	8	9	10	11	12	13	14	15	16	17
E	P	2						D	4	4	1	K				
a			b					c			d	e	f			

optional

a	Sensor model
E P 2	Smooth profile

b	Stroke length
X X X X M	0050…2540 mm

Standard stroke length (mm)	Ordering steps
50… 500 mm	25 mm
500…2540 mm	50 mm

X X X . X U	001.0…128.0 in.

Standard stroke length (in.)	Ordering steps
2… 20 in.	1.0 in.
20…100 in.	2.0 in.

Non-standard stroke lengths are available;
must be encoded in 5 mm/0.1 in. increments.

c	Connection type
D 4 4	M12 (4 pin) male connector

d	Operating voltage
1	+24 VDC (±25 %)

e	Output
K	IO-Link

f	Advanced single-position measurement or multi-position measurement (optional)
1 Z 0 X	Number of magnets 01…04 position and velocity (1…4 magnet(s)) 01…08 position (1…8 magnet(s))

NOTICE

- The number of magnets is limited by the stroke length.
  The minimum allowed distance between magnets (i.e. front face of one to the front face of the next one) is 75 mm (3 in.).
- Use magnets of the same type for multi-position measurement.

DELIVERY

- Sensor
- 2 × mounting clamps up to 1250 mm (50 in.) stroke length + 1 × mounting clamps for each 500 mm (20 in.) additional stroke length

Accessories have to be ordered separately.

Manuals, Software & 3D Models available at:
www.temposonics.com

Temposonics
AN AMPHENOL COMPANY

UNITED STATES
Temposonics, LLC
Americas & APAC Region
3001 Sheldon Drive
Cary, N.C. 27513
Phone: +1 919 677-0100
E-mail: info.us@temposonics.com

GERMANY
Temposonics GmbH & Co. KG
EMEA Region & India
Auf dem Schüffel 9
58513 Lüdenscheid
Phone: +49 2351 9587-0
E-mail: info.de@temposonics.com

ITALY
Branch Office
Phone: +39 030 988 3819
E-mail: info.it@temposonics.com

FRANCE
Branch Office
Phone: +33 6 14 060 728
E-mail: info.fr@temposonics.com

UK
Branch Office
Phone: +44 79 21 83 05 86
E-mail: info.uk@temposonics.com

SCANDINAVIA
Branch Office
Phone: + 46 70 29 91 281
E-mail: info.sca@temposonics.com

CHINA
Branch Office
Phone: +86 21 2415 1000 / 2415 1001
E-mail: info.cn@temposonics.com

JAPAN
Branch Office
Phone: +81 3 6416 1063
E-mail: info.jp@temposonics.com

temposonics.com

Document Part Number:
551831 Revision C (EN) 09/2022

ISO 9001 CERTIFIED

IO-Link