Temposonics
AN AMPHENOL COMPANY

Data Sheet

ER Start / Stop

Magnetostrictive Linear Position Sensors

- Compact sensor model
- Operating temperature up to +75 °C (+167 °F)
- Ideal for flexible mounting

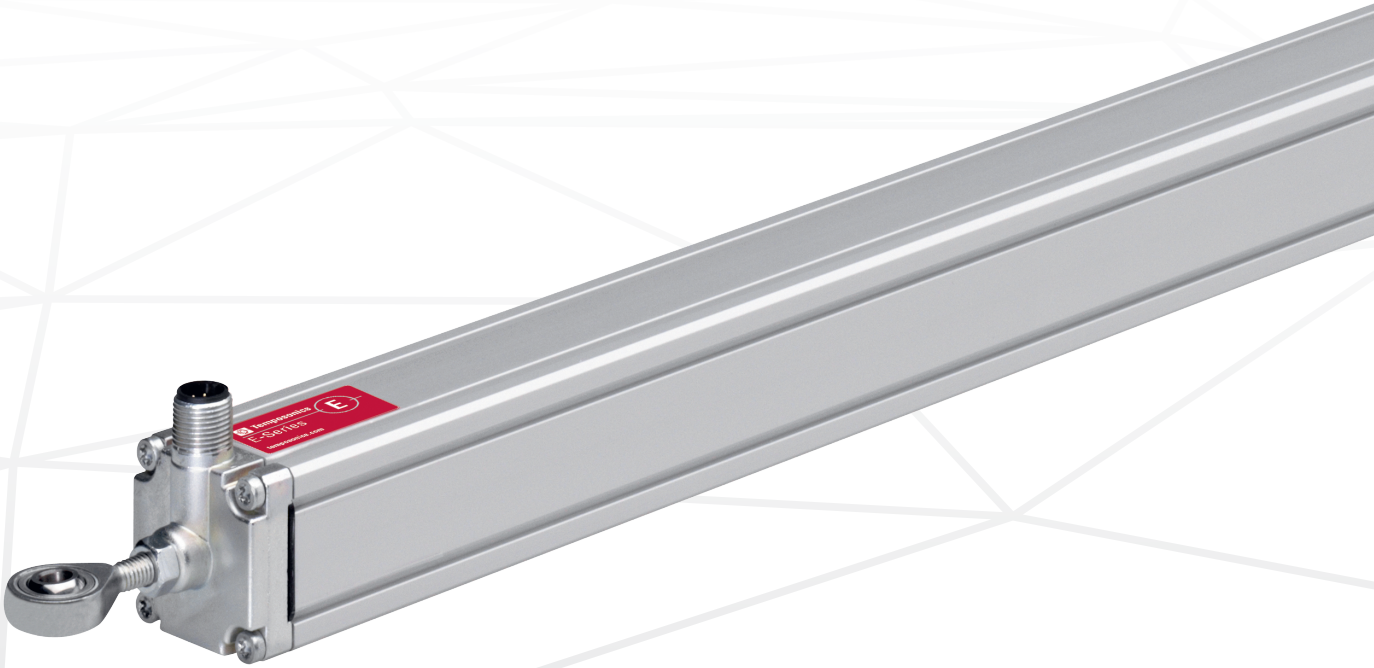

MEASURING TECHNOLOGY

The absolute, linear position sensors provided by Temposonics rely on the company's proprietary magnetostrictive technology, which can determine position with a high level of precision and robustness. Each Temposonics position sensor consists of a ferromagnetic waveguide, a position magnet, a strain pulse converter and supporting electronics. The magnet, connected to the object in motion in the application, generates a magnetic field at its location on the waveguide. A short current pulse is applied to the waveguide. This creates a momentary radial magnetic field and torsional strain on the waveguide. The momentary interaction of the magnetic fields releases a torsional strain pulse that propagates the length of the waveguide. When the ultrasonic wave reaches the end of the waveguide it is converted into an electrical signal. Since the speed of the ultrasonic wave in the waveguide is precisely known, the time required to receive the return signal can be converted into a linear position measurement with both high accuracy and repeatability.

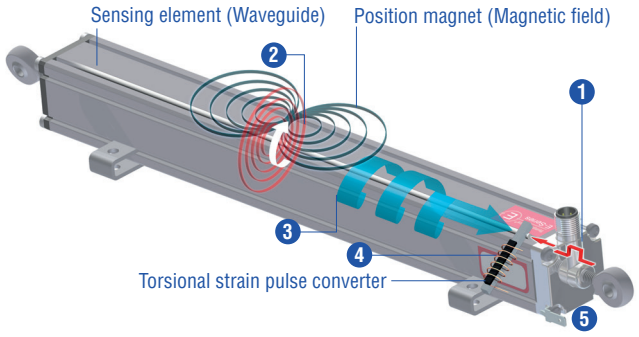

Measurement Cycle

1	Current pulse generates magnetic field
2	Interaction with position magnet field generates torsional strain pulse
3	Torsional strain pulse propagates
4	Strain pulse detected by converter
5	Time-of-flight converted into position

Fig. 1: Time-of-flight based magnetostrictive position sensing principle

ER SENSOR

Robust, non-contact and wear free, the Temposonics linear position sensors provide the best durability and precise position measurement feedback in harsh industrial environments. Measurement accuracy is tightly controlled by the quality of the waveguide manufactured exclusively by Temposonics.

The Temposonics® ER has an aluminum rod-and-cylinder design where the rod can extend and retract from the sensor housing to measure linear position. Inside, a magnet is secured to the end of the rod and remains protected within the sensor electronics housing. Accessory rod ends are available for attaching the rod to the machine's moving part. The rod-and-cylinder sensor design can be installed in any orientation, and provides a convenient and versatile position feedback solution. Typical fields of applications are printing and paper industry, machine tools and plastics industry as well as control systems.

Fig. 2: Typical application: Paper industry

TECHNICAL DATA

Output	
Start/Stop	RS-422 differential signal Serial parameter upload available for: stroke length, offset, gradient, status, serial number and manufacturer number.
Measured value	Position
Measurement parameters	
Resolution	Controller dependent
Cycle time	Controller dependent
Linearity	≤ ±0.02 % F.S. (minimum ±60 µm)
Repeatability	≤ ±0.005 % F.S. (minimum ±20 µm)
Operating conditions	
Operating temperature	–40…+75 °C (–40…+167 °F)
Humidity	90 % relative humidity, no condensation
Ingress protection [1,2]	IP67 (connectors correctly fitted)
Shock test	100 g (single shock) IEC standard 60068-2-27
Vibration test	5 g / 10…2000 Hz IEC standard 60068-2-6 (resonance frequencies excluded)
EMC test	Electromagnetic emission according to EN 61000-6-3 Electromagnetic immunity according to EN 61000-6-2 The sensor meets the requirements of the EC directives and is marked with CE.
Magnet movement velocity	≤ 5 m/s
Design / Material	
Sensor electronics housing	Aluminum
Guided driving rod	Aluminum
Stroke length	50…1500 mm (2…60 in.)
Mechanical mounting	
Mounting position	Any
Mounting instruction	Please consult the technical drawings and the brief instruction (document number: 551684)
Electrical connection	
Connection type	M12 (8 pin) male connector
Operating voltage	+24 VDC (–15 / +20 %); UL recognition requires an approved power supply with energy limitation (UL 61010-1), or Class 2 rating according to the National Electrical Code (USA) / Canadian Electrical Code.
Ripple	≤ 0.28 V_{pp}
Current consumption	50…100 mA
Dielectric strength	500 VDC (DC ground to machine ground)
Polarity protection	Up to –30 VDC
Overvoltage protection	Up to 36 VDC

1/ The IP rating is not part of the UL recognition.
2/ The IP rating IP67 is only valid for the sensor electronics housing, as water and dust can get inside the profile.

TECHNICAL DRAWING

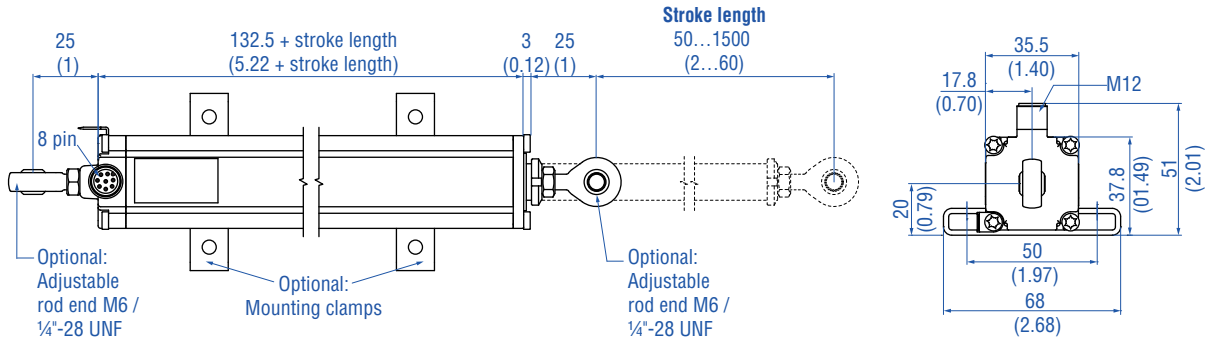

Controlling design dimensions are in millimeters and measurements in ( ) are in inches

Fig. 3: Temposonics® ER

CONNECTOR WIRING

D84		
Signal + power supply		
M12 male connector (A-coded)	**Pin**	**Function**
 View on sensor	1	Start (+)
	2	Start (–)
	3	Stop (+)
	4	Stop (–)
	5	Not connected
	6	Not connected
	7	+24 VDC (–15 / +20 %)
	8	DC Ground (0 V)

Fig. 4: Connector wiring D84

FREQUENTLY ORDERED ACCESSORIES – Additional options available in our Accessories Guide 551444

Cable connectors [3]

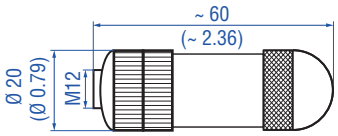

M12 A-coded female connector (8 pin), straight
Part no. 370 694

Housing: GD-ZnAL
Termination: Screw
Contact insert: CuZn
Cable Ø: 4…9 mm (0.16…0.35 in.)
Wire: 0.75 mm²
Operating temperature:
–25…+90 °C (–13…+194 °F)
Ingress protection: IP67 (correctly fitted)
Fastening torque: 0.6 Nm

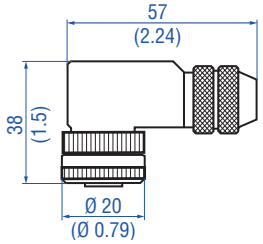

M12 A-coded female connector (8 pin), angled
Part no. 370 699

Housing: GD-ZnAL
Termination: Screw
Contact insert: CuZn
Cable Ø: 6…8 mm (0.24…0.31 in.)
Wire: 0.5 mm²
Operating temperature:
–25…+85 °C (–13…+185 °F)
Ingress protection: IP67 (correctly fitted)
Fastening torque: 0.6 Nm

Cord sets

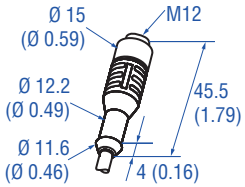

Cable with M12 A-coded female connector (8 pin), straight – pigtail
Part no. 370 674

Material: PUR jacket; black
Features: Shielded
Cable length: 5 m (16.4 ft)
Ingress protection: IP67, IP69K (correctly fitted)
Operating temperature:
–25…+80 °C (–13…+176 °F)

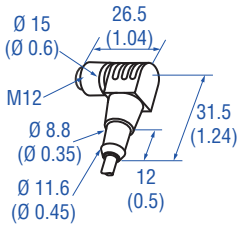

Cable with M12 A-coded female connector (5 pin), angled – pigtail
Part no. 370 675

Material: PUR jacket
Features: Shielded
Cable length: 5 m (16.4 ft)
Ingress protection: IP67 (correctly fitted)
Operating temperature:
–25…+80 °C (–13…+176 °F)

Rod ends

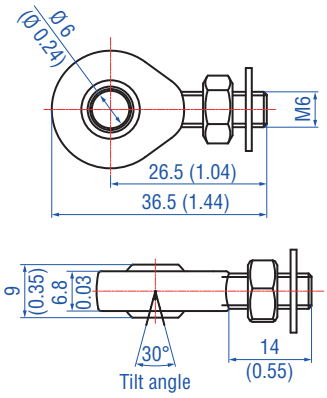

Rod end with M6 thread
Part no. 254 210

Material: Galvanized steel

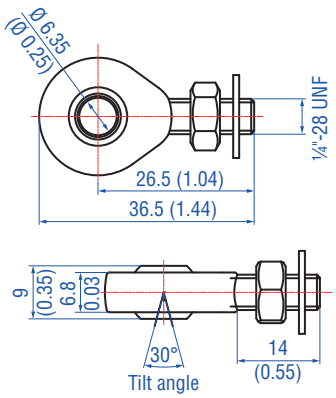

Rod end with ¼"-28 UNF thread
Part no. 254 235

Material: Galvanized steel

Mounting clamp

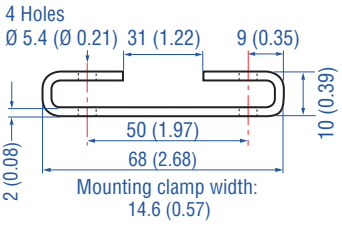

Mounting clamp
Part no. 403 508

Material: Stainless steel 1.4301 / 1.4305 (AISI 304 / 303)

3/ Follow the manufacturer's mounting instructions

Controlling design dimensions are in millimeters and measurements in ( ) are in inches

ORDER CODE

1	2	3	4	5	6	7	8	9	10	11	12	13	14
E	R							D	8	4	1	R	3
a		b	c					d			e	f	

a	Sensor model
E R	Aluminum cylinder with a guided driving rod

b	Design
M	Inside thread M6 at end of rod (For metric stroke length measurement)
S	Inside thread ¼"-28 UNF at end of rod (For US customary stroke length measurement)

c	Stroke length
X X X X M	0050…1500 mm

Standard stroke length (mm)*	Ordering steps
50 … 500 mm	25 mm
500…1500 mm	50 mm

X X X X U	002.0…060.0 in.

Standard stroke length (in.)*	Ordering steps
2…22 in.	1.0 in.
22…60 in.	2.0 in.

d	Connection type
D 8 4	M12 (8 pin) male connector

e	Operating voltage
1	+24 VDC (–15 / +20 %)

f	Output
R 3	Start / Stop with sensor parameters upload function

DELIVERY

- Sensor
  Select mounting accessories regarding your application:
- 1 or 2 rod ends M6 / ¼"-28 UNF or / and
- 2 mounting clamps up to 1250 mm (50 in.) stroke length, 3 mounting clamps for 1500 mm (60 in.) stroke length

Accessories have to be ordered separately.

Manuals, Software & 3D models available at:
www.temposonics.com

*/ Non standard stroke lengths are available; must be encoded in 5 mm / 0.1 in. increments.
Some preferred stroke lengths may be available with faster lead time. Contact MTS Sensors for details.

Temposonics
AN AMPHENOL COMPANY

UNITED STATES
Temposonics, LLC
Americas & APAC Region
3001 Sheldon Drive
Cary, N.C. 27513
Phone: +1 919 677-0100
E-mail: info.us@temposonics.com

GERMANY
Temposonics GmbH & Co. KG
EMEA Region & India
Auf dem Schüffel 9
58513 Lüdenscheid
Phone: +49 2351 9587-0
E-mail: info.de@temposonics.com

ITALY
Branch Office
Phone: +39 030 988 3819
E-mail: info.it@temposonics.com

FRANCE
Branch Office
Phone: +33 6 14 060 728
E-mail: info.fr@temposonics.com

UK
Branch Office
Phone: +44 79 21 83 05 86
E-mail: info.uk@temposonics.com

SCANDINAVIA
Branch Office
Phone: + 46 70 29 91 281
E-mail: info.sca@temposonics.com

CHINA
Branch Office
Phone: +86 21 2415 1000 / 2415 1001
E-mail: info.cn@temposonics.com

JAPAN
Branch Office
Phone: +81 3 6416 1063
E-mail: info.jp@temposonics.com

temposonics.com

Document Part Number:
551680 Revision B (EN) 07/2019

ISO 9001 CERTIFIED